PET CAN TECH

Karta techniczna / Technical data sheet
Puszka PET / CAN PET 330_standard

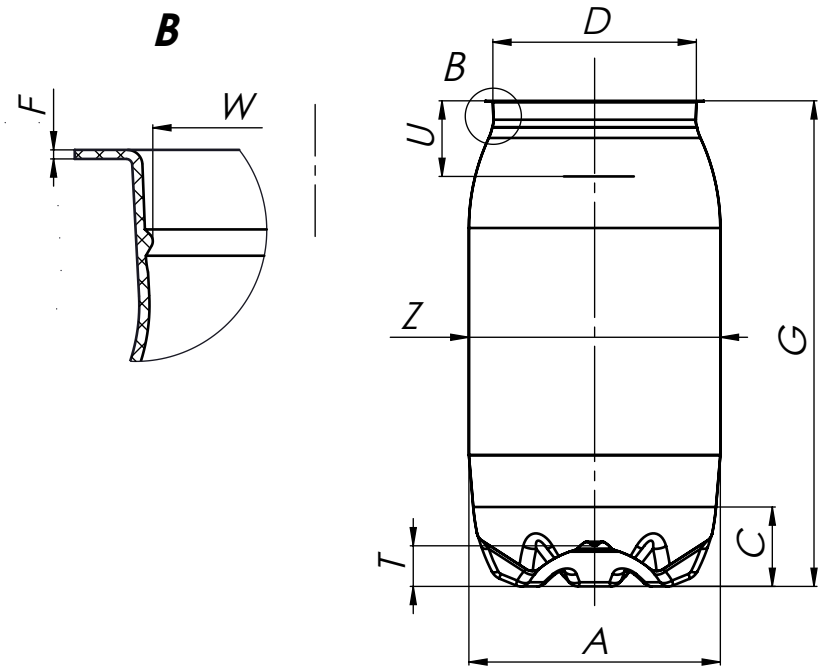

-	Product	Can 330_standard	
-	Number	12649-5	
-	Closure type	202	
-	Volume	330 (ml)	11,16 (oz)
A	The outer diameter	66,5 ± 0,5 (mm)	2,618 ± 0,02 (in)
G	The height of empty cans	128,4 ± 0,5 (mm)	5,055 ± 0,02 (in)
Z	The diameter of the label	66,5 ± 0,5 (mm)	2,618 ± 0,02 (in)
D	The diameter of the flange	57,3 + 0,5 (mm)	2,256 + 0,02 (in)
F	The thickness of the flange	0,30 + 0,05 (mm)	0,012 + 0,002 (in)
P	The diameter of the base ring	40 ± 0,5 (mm)	1,575 ± 0,02 (in)
C	The height of the socket	21 ± 0,5 (mm)	0,827 ± 0,02 (in)
U	Fill level	20 ± 1 (mm)	0,787 ± 0,04 (in)
T	Push up height	11,9 ± 0,5 (mm)	0,469 ± 0,02 (in)
W	Inner flange diameter	52,3 max. (mm)	2,059 max. (in)
-	Resistance to axial pressure	67,3 (kg)	148,37 (lb)
-	Resistance to internal pressure	6,2 (bar)	89,92 (psi)
-	The nominal weight of the cans (no closure)	26,5 ± 0,8 (g)	0,0584 ± 0,0018 (lb)
-	Date / Rev A	2016-11-18	

PET CAN TECH Sp. z o.o.
Plac Jagielloński 8, 26-600 Radom
e-mail: info@petcan.tech

PET CAN TECH

Karta techniczna / Technical data sheet
Puszka PET / CAN PET 330_standard

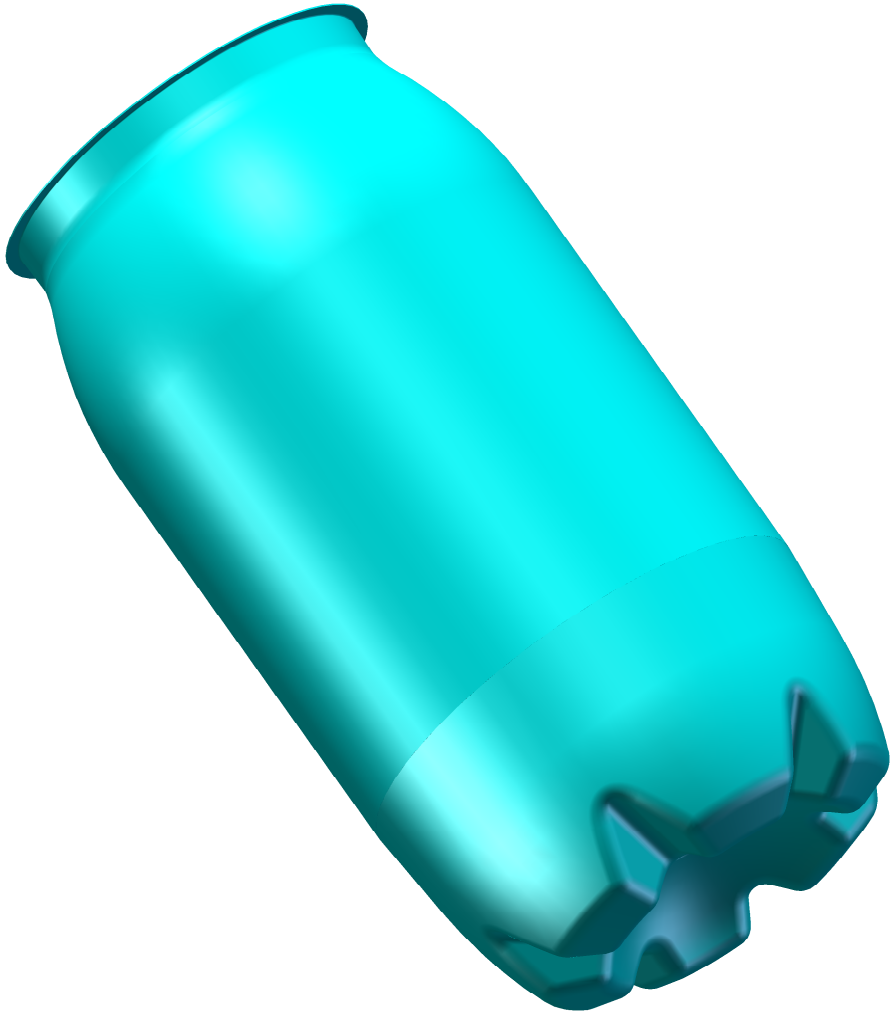

PET CAN TECH Sp. z o.o.
Plac Jagielloński 8, 26-600 Radom
e-mail: info@petcan.tech